WEBLON SAFETY
Pvt. Ltd.

Since
2012

Located in Rohini, Delhi, Weblon Safety Pvt. Ltd. is built on a foundation of trust, quality, and innovation.

Our company is the best place where you can find highest quality solutions such as Polyester Strap Roll, Ratchet Assembly, Plastic Packaging Products, Polyester Strap, Non Woven Lashing Belt, Philips Bits, etc.

About

Weblon Safety Pvt. Ltd.

Welcome to Weblon Safety Pvt. Ltd., a premier name in the packaging industry, dedicated to providing a comprehensive range of high-quality products that serve diverse industrial needs. Since our establishment in 2010, we have been steadfast in our commitment to excellence, offering an extensive array of products including Cord strap (Composite Strap), Ratchet, Assembly Lifting Slings,Cargo Nets, Lasing Belts, and All Types of Packing Tools including Air and Pneumatic tools etc. Our products are renowned for their superior quality, eco-friendliness, and competitive pricing, making them the preferred choice in both domestic and international markets.

Why Choose Us

We have established a modern production facility equipped with latest technology. The high-end machines allow us to create items in huge quantity. Our infrastructure also consists of other departments like quality control, packaging, warehousing and R&D.

Reason to Buy to Us

- Best Wholesale Pricing
- Premium Quality Products
- 100% Customer Satisfaction Guarantee
- Best Packaging in the Industry
- Dedicated Customer Service
- Lowest Global Shipping Rates

We Deal In

Composite Cord Strap

Material	Polyester
Color	White
Width	13MM to 32 MM
Usage	for securing loads
Application	Packaging Industries

Polyester Woven Lashing Belt

Width	16 MM to 200 MM
Color	Any
Product Type	Polyester Lasing Belts

Ratchet Assembly

Size	25,35,50,75,100 MM
Lenth	5 Mtr , 10Mtr, Any lenth
Usage	Industrial Purpose
Condition	New
Feature	High Quality
Attributes	Strong Durable

Flat Webbing Lifting Sling

Size	25 to 200 MM
Color	Any
Usage	used in various industries
for lifting and securing heavy loads	
Length	Customize
Material	Polyester

Lashing Buckle

Size	35 MM
Capacity	3 TON APPROX
Design Type	Standard
Color	SILVER AND GOLDEN
Brand	RIDDHI SIDDHI
Finishing	SILVER

Dunnage Bag

A dunnage bag is an inflatable air cushion used to secure and protect cargo during shipping and transport. These bags are typically made from durable materials and are designed to fill empty spaces in shipping containers, trucks, or railcars to prevent movement and damage.

We Deal In

Cord Strap Tensioner

Type	Cord Strap Tensioner
Grade	Manual
Control System	Human Machine
Interface	
length	as per standards

SS Strapping Tool

Type	Strapping Tool
Dimension (L*W*H)	up t0 32 MM
Millimeter (mm)	
Grade	Manual

AQD 19 Pneumatic Strapping Tools

Type	Pneumatic Strapping Tools
Color	Silver
Weight (kg)	4 Kilograms (kg)

Pneumatic Steel Strap Strapping Tensioner & Sealer

Type	Strap Tensioner And Sealer
Color	Black, Silver
Size	Up to 32MM

Composite Cord Buckle

Size- 13-40 MM

A composite cord buckle is a type of fastening device made from lightweight, durable materials, often used in conjunction with cord or strap systems. These buckles are designed to secure and adjust the tension on the cord or strap, making them useful in various applications, including outdoor gear, luggage, and packaging.

Cam Buckle

Size- 13-50 MM

A cam buckle is a type of fastening device used to secure straps or cords. It consists of a metal or plastic buckle that incorporates a cam mechanism to tighten and hold the strap in place. Here are some key features and benefits of cam buckles:

We Deal In

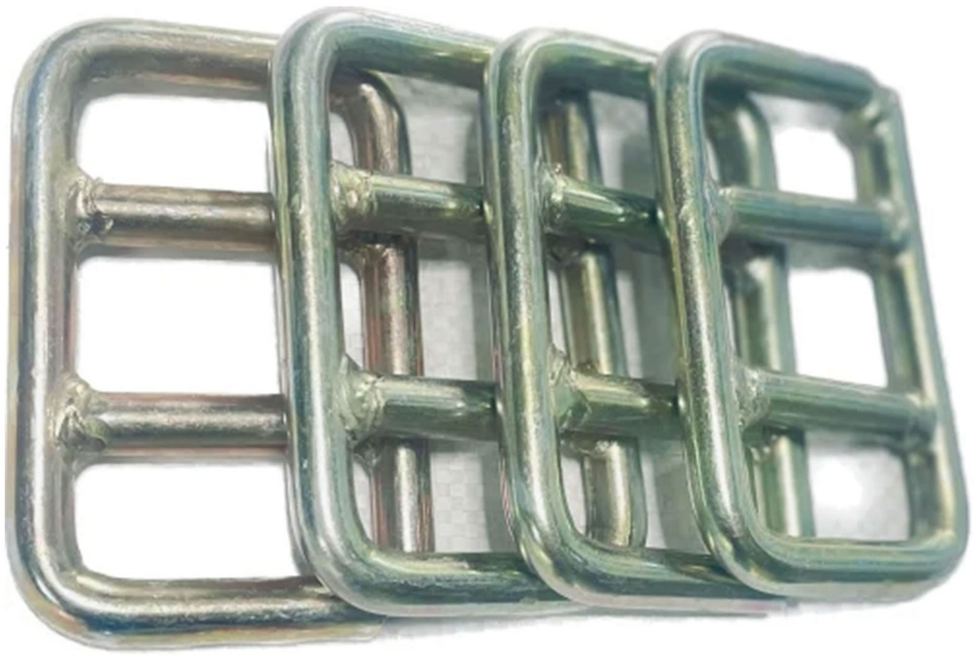

Forged buckle

Strength 5 Ton

Forged one-way buckles are assembled to ratchet lashings. Use it for tying down loads whilst transporting, shifting or moving them. Main advantages of Forged lashing buckle are that you can tie down the load extremely efficient and quick.

Cutting Wheel

Sizes - 100 MM, 125MM, 175MM, 350MM, 400MM

A cutting wheel, also known as a cut-off wheel or cut-off disc, is a tool used for cutting, notching, and grinding materials. They are commonly used in metalworking, construction, and other industrial application

Flap Disk

Sizes- 100MM,125MM
Grit- 60,80,120

A flap disc is a circular abrasive tool used on an angle grinder for grinding, blending, and finishing. It's made up of many overlapping layers of abrasive material, or "flaps", bonded to a backing plate. As the disc is used, the flaps wear away to expose fresh abrasive

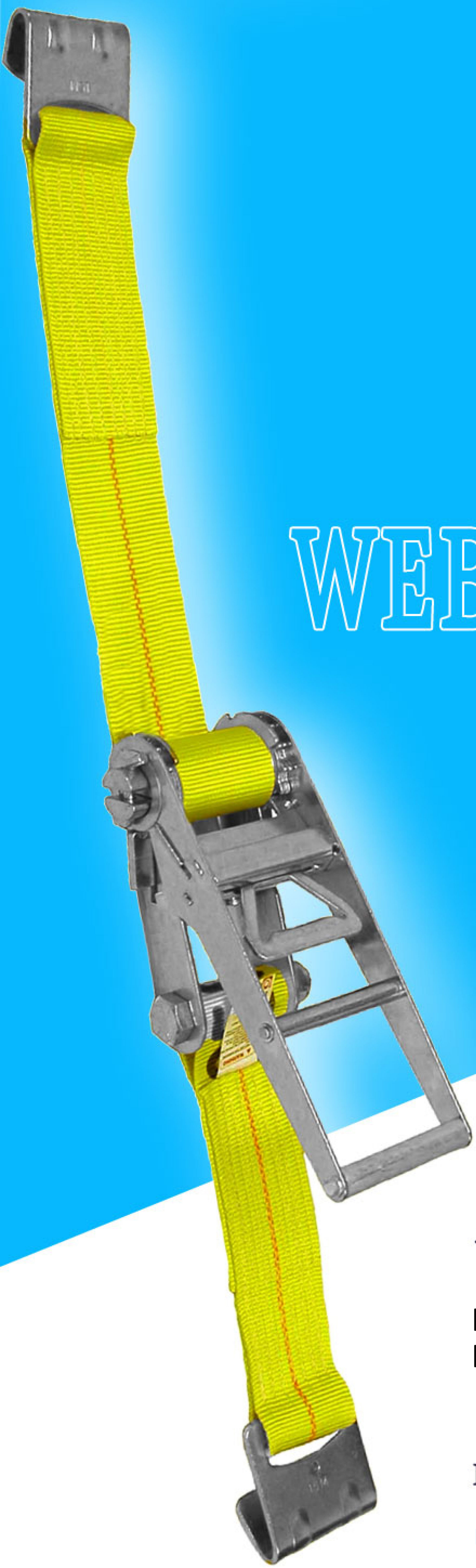

WEBLON SAFETY
Pvt. Ltd.

Address:

B-3/16 First Floor Sector-16
Rohini New Delhi India -110089

Mobile : +91 - 9810399733

Info@weblonsafety.com